Series 130
Valve Block

FEATURES

- Universal Valve Block for various applications.
- High vacuum and fluid and oil flow rates
- Air operated poppet valves
- Lightweight
- Separate fluid and oil vacuum connections
- Easy Valve Body Maintenance

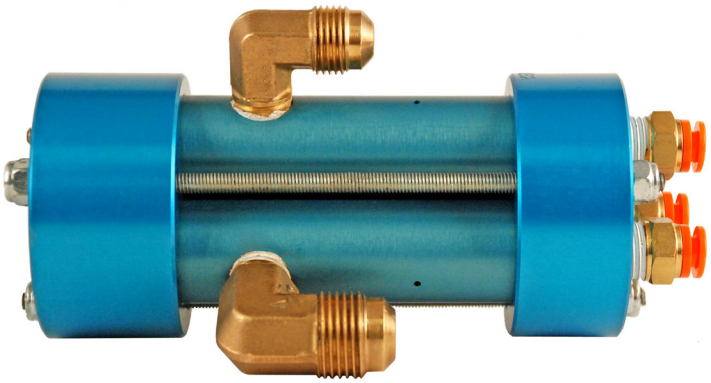

The Series 130 Valve Block Tool is the interface between a manual or automatic clamping mechanism and the fill system. Standard design includes a 3/8" NPT female connection for any manual coupler, power coupler or an automatic clamping mechanism. Refer to product bulletins, PB47 for manual coupler; and PB 49 for power coupler series 130 designs.

The Series 130 Valve Block Tool is designed to operate with Mass Flowmeter Fill System. Tools with automatic clamping are available. Please contact PCU for further information.

The tool contains three separate fluid circuits, controlled by air pilot pressure, which may be used for vacuum, refrigerant, salvage, oil, or any other fluid.

Save money with the PCU Series 130 Valve Block Tool. Contact our Order Department at (1-937-299-5594) with your application and equipment specifications.

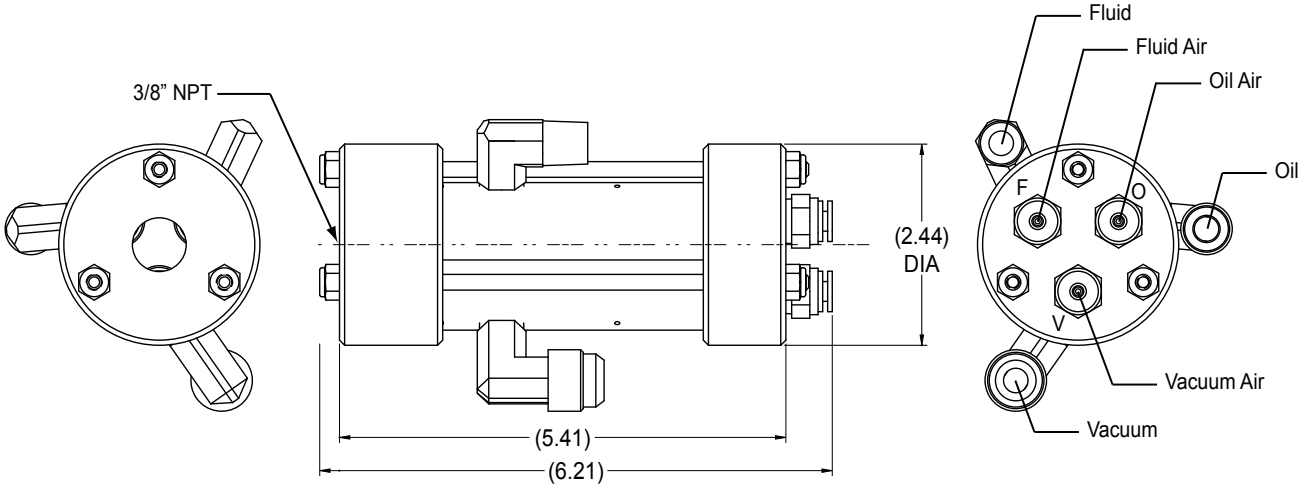

(3 valve design shown, please contact PCU Engineering for 4 valves and larger.)

Part Number 1 3 0 0 7 7 _

Series 130

Valve Block

No. of Valves	Stem	O-Ring Compounds
3	**0** = No Stem	**1** = Neoprene
4	**1** = With Stem	**2** = Buna-n (Nitrile)
5		**3** = Fluorocarbon
6		6 = EPDM

STANDARD STOCK PART NUMBER: 130077-302

TECHNICAL SPECIFICATIONS:

Weight . . . . . .2 lbs (0.91 kg)
Vacuum range . . . . . 0–760 TORR (0–760 mmHg)

Max Fluid Pressure . . . . . 300 psig @ 60 psi
(EPDM Compound . . . . . .300 PSI)

Vacuum port fitting. . . . . 1/2" JIC flare
Fluid. . . . . 1/4" NPT Male
Oil Port Fitting . . . . . 3/8" SAE flare
Air pilots. . . . . .(Vacuum, Fluid, Oil)
Air supply pressure . . . . . 70 PSIG (4.9 kg/cm^2)

Air port fittings . . . . 1/4" dia. one touch connectors

Tool Valve Block Flow Capacity (Fluid, Vacuum, Oil)
. . . . . .1.3Cv (Typical)

Process fitting compatibility. . . . . 3/8" NPT

PATENTS:

Patent Pending

* For other configurations and multiple poppet valves, please contact PCU Engineering for dimensions and availability.

Production Control Units, Inc.

2280 West Dorothy Lane, Dayton, Ohio 45439-1892 Phone (937) 299-5594 FAX: (937) 299-4843
©Production Control Units, Inc. U.S.A. **Web: www.pcuinc.com**